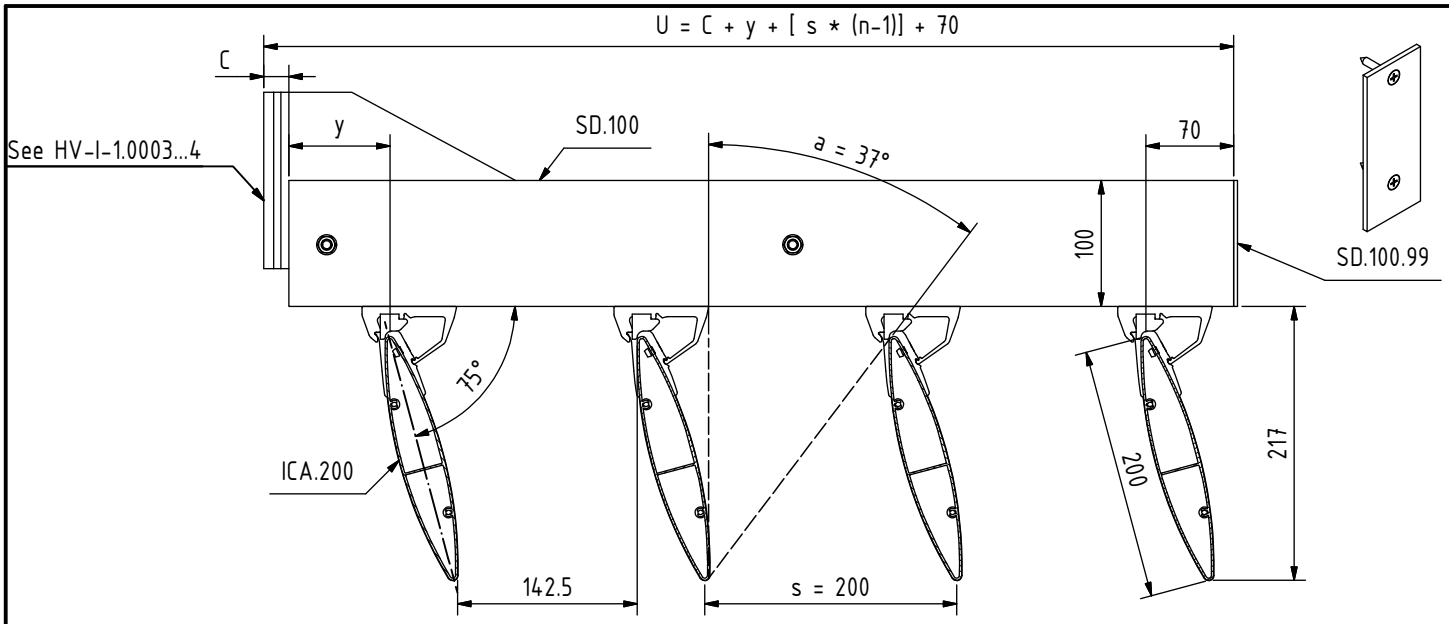

A-A

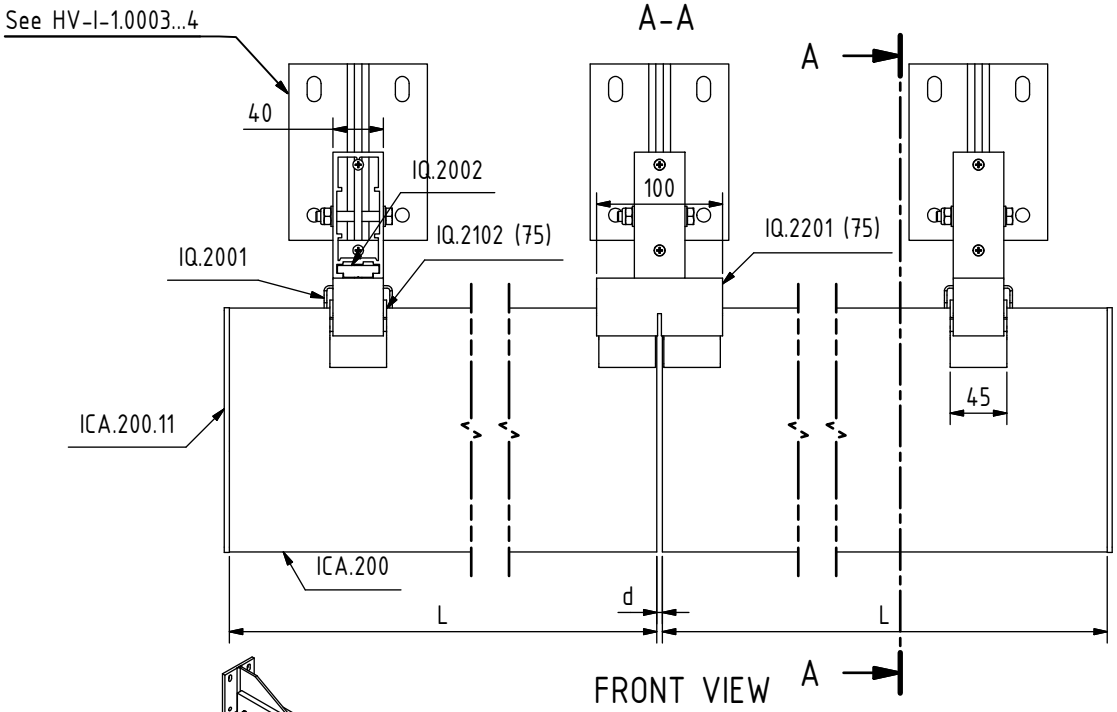

FRONT VIEW

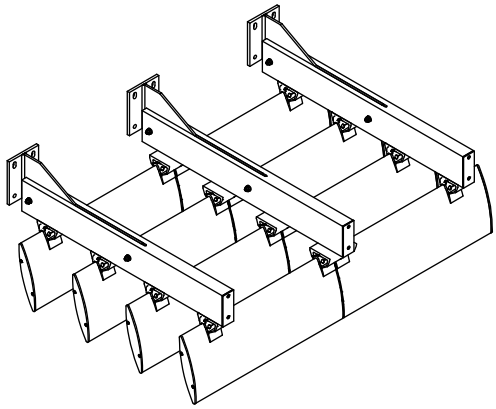

Maximal dimensions to be discussed with R&D Dept. of NV Renson Projects.

KEY REFERENCE

L:	Length of blade [mm]
d:	Expansion joint [mm] = 0,001 x L
s:	Step of blade [mm]
a:	Min. sun entrance angle [°]
U:	Projection [mm]
y:	≥ 80 mm
n:	Number of blades
C:	Projection knife [mm]

RENSON® Creating healthy spaces
NV RENSON Projects
Maalbeekstraat 6
8790 Waregem
Belgium
Tel.: +32 (0)56 62 71 07
Fax: +32 (0)56 62 71 47
www.renson.eu

HORIZONTAL FIXED

TYPE: ICARUS SUBTYPE: QUICKFIX

DESCRIPTION: ICA.200 (90°) + SD.100 ON BLADE

PRODUCT SHEET	SHEET N°	ISSUE	Scale: 1/6
	HV-I-1.0336	V.02	Orig. format: A4

R:\CAD\91. ProductFiches\INV\HV\IN\HV_I_1_0336-EN.dw

All rights reserved to NV RENSON PROJECTS. This drawing shall not be copied nor showed to third parties without written permission of NV RENSON PROJECTS.